V-Drill

The Operators Manual

Contact Details;
Claydon Yield-O-Meter Ltd
Gaines Hall, Wickhambrook, Newmarket, Suffolk, CB8 8YA
Tel; +44 (0) 1440 820 327 Fax; +44 (0) 1440 820 642
Email; info@claydondrill.com
www.claydondrill.com

Foreword

The purpose of this instruction manual is to comprehensively explain to the operator how to both setup and operate the Claydon Drill.

It is advisable that the operator reads this book before he uses the machine. If anything in this manual is at all unclear please contact Claydon Yieldometer Ltd on 01440 820 327.

The Claydon Drill will give many years of excellent service with little maintenance due to its lack of moving parts. However to gain optimum life from the machine some service will be necessary.

We reserve the right to make modifications to the machine in the future that may make some diagrams in this manual 'out of date', this should not affect the clarity of this manual.

Machine Specification

Machine	Working Width	Transport Width	Weight	Max Hopper Capacity	Number of Working Rows
3.45m V	3.45m	3.45m	3100Kg	1700 L	11
4m V	4m	4m	3500Kg	1700 L	13
4.8m V	4.8m	2.85m	4500Kg	1700 L	15
6m V	6m	6m	4960Kg	1700 L	19

Weight Distribution of a 6m Drill with a Trailed Kit

- Total Weight (Tractor and Drill) = 11,260Kg
- Tractor = 6,300Kg
- Drill = 4.960Kg
- Back Axle = 3,480Kg
- Draw Bar = 1480Kg

CONTENTS

INTRODUCTION

Thank you for your purchase of a new Claydon Drill. Please fill in this section of the manual as soon as you receive your machine,

Claydon Drill Serial Number……
See left hand plate near where the top link attaches to the machine.

You may be required to quote the serial number of the machine when you order spare parts in the future.

Note:
This manual should be used in conjunction with the Sulky Burel seed hopper, and RDS Electronic Box manuals.

Definitions
The terms ‘front’ and ‘rear’ and ‘left’ and ‘right’ in this manual refer to the machine as follows:-
‘Front’ indicates the three point linkage end of the machine.
‘Rear’ indicates the open end of the V of the machine.
‘Left’ indicates the left of the machine as you are looking at the machine from the rear.
‘Right’ indicates the right side of the machine as you are looking at the machine from the rear.

PREPARATION

1. General
2. Connecting the drill to your tractor
3. Lubricating points
4. Marker Arms
5. Changing Bourgault Wearing Parts
6. Setup for:
    a. Rape Seed & Similar
    b. Wheat, Barley & Similar
    c. Beans, Maize & Similar

1. General

As soon as you receive delivery of your Claydon Drill, make a thorough inspection for any damage that may have occurred in transit. Take loose parts out of the seed box and fit any parts that may have been removed for transportation reasons, these may include press wheels, wheel scrapers and following harrow. It is unlikely that we would have removed anything else.

2. Connecting the drill to your tractor

Our drill can be hooked up to any tractor big enough to lift the drill on its three point linkage.

Connect the three point linkage to the linkage points on the drill using the pins supplied and CATIII balls (not supplied).

Connect the hydraulic hoses to the back of the tractor being sure that you match the pairs of hoses to pairs of spool valves.

IMPORTANT NOTE: - the hydraulic hose to the fan that has a RED end must be attached the pressure side of the hydraulic system on your tractor. The BLUE hose end MUST go to a FREE FLOW return on the tractor. Failure to do this will result in the pressure gauge and hydraulic motor on the fan being damaged. You will need to refer to your Tractor's hand book or ask you dealer where you can find the free flow return as different tractor's have them in different locations.

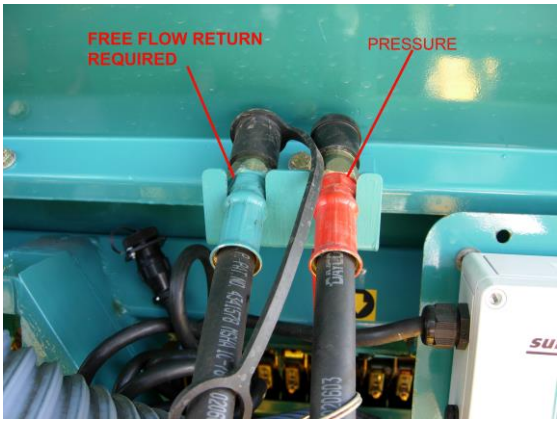

Locate the Electronic Box in your tractor cab and fix securely. Connect the electronic box to the sensor's cable on the drill making sure that the cable is clear of any trap points.

3. **Lubricating Points**

   3.45m & 4m Machines

The only 2 lubrication points on a 3.45m or 4m machine are on the depth wheel that has the drill drive unit machined into it and on the base of the drive unit itself.

4.8m & 6m Machines

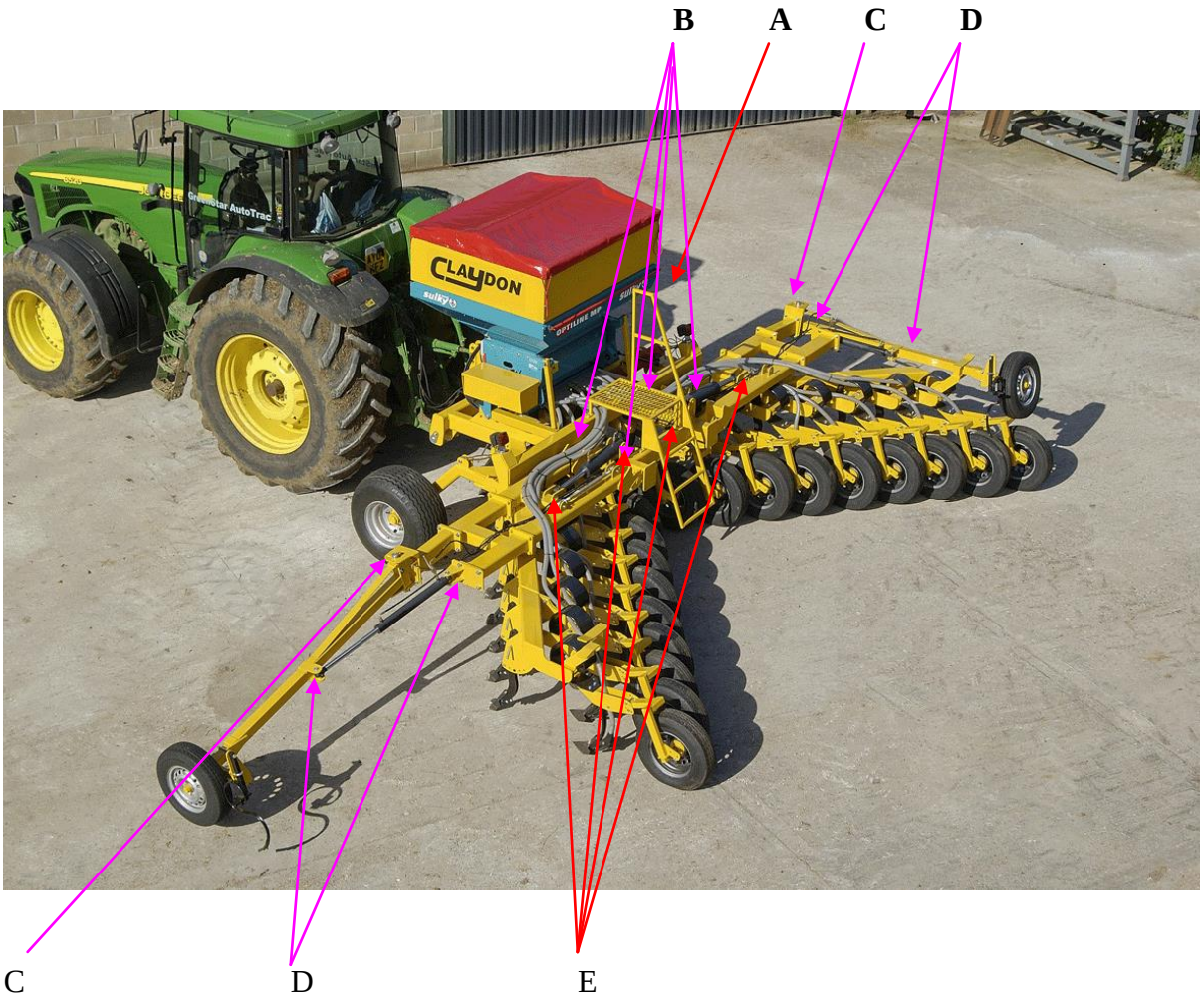

A –Depth Wheel Stub Axle and Seed Box Drive


B – Wing Pivots C – Marker Pivot


D – Marker Ram Ends


E – Folding Ram Ends

4. Marker Arms

When you receive your new Claydon Drill the marker arms will be set to their shortest position for transportation reasons. You will need to set the marker arms up for your machine as follows:

To obtain centre marking distance; you need to measure perpendicular from the centre of the front point to the centre of the marker point (with the marker arm swung out). This measurement needs to be equal to the width of your machine. i.e. if you have a 4.8m Claydon Drill the measurement should be 4.8m perpendicular from the front point across to where the marker point is running. The following picture demonstrates how to do this on a 6m machine.

To adjust the marker arm, you will need to slacken the two nuts on the U-Bolt that is located half way down the marker arm and slide the bottom length of the arm out to the desired distance from the centre point.

5. Changing Bourgault Wearing Parts

It is important that you change the Bourgault parts properly. Failure to change wearing parts correctly may cause serious injury, loss of parts or damage to parts.

a. Health and Safety

Always wear a pair of gloves and some safety goggles when changing wearing parts to avoid injury.

b. Removing the Wearing Part

Hook the special Bourgault tool over the top of the wearing part and push the pin down with the tool. With the pin pushed down knock the top of the tool with a hammer to remove the point. NEVER use a punch and a hammer to push the pin in as this will damage the spring.

c. Replacing the wearing part

To replace the wearing part; slide the wearing part up the foot and knock on the end with a hammer and block of wood to drive the part into place. **Always place a block of wood on the end of the point and hit the wood with a hammer**.

This method is used to change both the front and rear points.

NEVER HIT A TUNGSTEN CARBIDE POINT DIRECTLY WITH A HAMMER AS THIS CAN CAUSE THEM TO SHATTER LIKE GLASS AND CAUSE SERIOUS INJURY.

d. Changing the Seed Distributor

To change the seed distributor; undo the bolt that runs through the seed boot holder, remove the bolt and the seed boot will drop out, now place the new seed boot in the holder and replace the bolt and pinch up the nut.

Bolt to remove

6. Setting up the Claydon Drill for various crops.

To get the best results from the Claydon Drill it is necessary to use varying points and seed boots for different seed types. Also the depth at which the seed is sown is important and will be dealt with at a later point in this manual.

The following are the interchangeable points and seeding equipment on the Claydon Drill.


Tungsten Carbide Chromium


A-Share (5” or 7” available) 3” Spoon



Splitter Boot Bean Chute Straight Boot

The table depicting the setup of the points on the drill can be found at the end of this manual.

Setup for Drilling OSR on 600mm Centres

1- Remove the centre front tine by slackening the shear bolt and the front bolt, then remove the top pin and slide the tine out. Repeat this process for every-other front tine up the machine.
2- Remove the M12 U-bolt and the M16 bolt from the centre goliath tine (big leaf spring that the press wheel and the seeding tine are mounted on), remove the seed hose from the seeding boot, then remove the whole section from the machine. Repeat this for every-other seeding tine.
3- Decide whether you want the redundant hoses to broadcast seed or not (some people do some don't).
4- If you decide not to broadcast seed you will need to follow the redundant pipes back and push down the gold coloured tab on the seed distribution unit behind the calibration (above the relevant metering wheel) tray to shut the seed off.
5- Set up the marker arms. You can make a mark on the arm on the smaller box section where it slides into the larger one and extend it out 300mm from there. Or, you can measure from the centre of the drill to the marker point and measure it off to 6.3m.

OPERATING INSTRUCTIONS

1. How and where to make adjustments
2. General setup of machine
3. Operating depths of points
4. How to check that the machine is operating correctly and adjust it to do so
5. General maintenance

1. How and where to make adjustments

Please refer to the diagram below referencing adjustment points.

a b c/d e

d. The Top Link adjusts the level of the front to rear of the machine. (If you have a trailed machine, the top link on the draw bar acts in the same way).

e. Depth Wheel top links adjust the level of the machine on the left to right axis and controls the depth of seeding tines and the seed itself.

f. The front tine depth is adjusted by removing the top pin, slackening the two bolts and sliding the tine up and down reinserting the pin into the desired hole and tightening up the bolts.

g. The angle of the front tine can be adjusted by removing the two lower bolts and swinging the tine to the desired position and reinserting the bolts. (There is no reason to move the tine from the front position in most cases).

h. Adjusting the pressure on the press wheels / harrow tines can be adjusted by moving the bolts into the relevant holes. There are three settings, the front pair of holes for most pressure, middle pair of holes for medium pressure and the rear set of holes for least pressure. THIS ADJUSTMENT DOES NOT AFFECT THE SOWING DEPTH.

2. General setup of the machine

Set the machine level.
Firstly, ensure that the machine is set level from front to back. This can be done by setting it as level as possible in the yard by eye. To adjust the level of the machine you will need to adjust the top link on the tractors three point linkage (if you have a trailed machine then it will need to be adjusted by the top link on the draw bar). By lengthening the top link the rear of the machine will travel deeper than the front and vice versa.

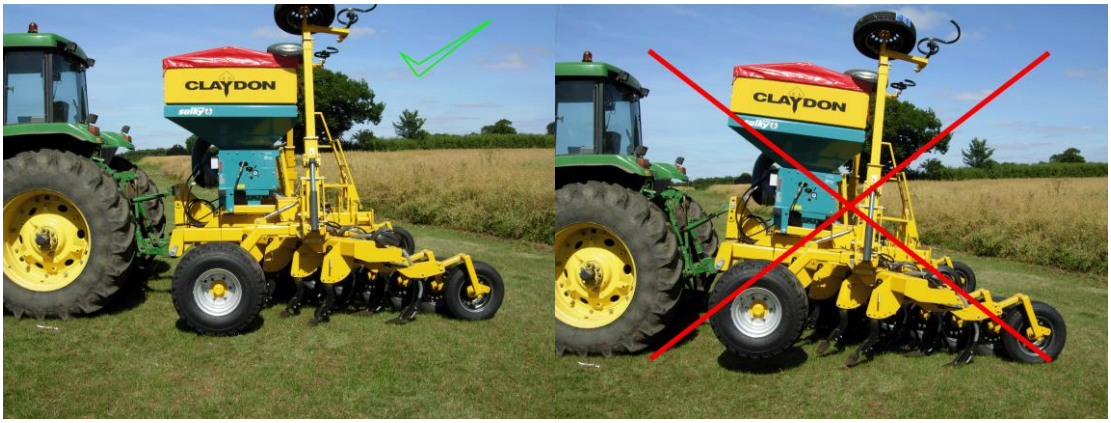

Make sure that the top links that control the depth wheels are both the same length. You can measure the length with a tape measure. If they are not the same length the machine will be seeding deeper one side than the other. However, if you find that one side is consistently sowing deeper you may need to make one top link slightly longer than the other; this could be due to tyre pressure or replaced top links with a different thread.

Tip:
With the front tines set to the required depth below the seeding tine, stand the drill on some level concrete. Measure the distance below the seeding tine to the concrete. Place a wooden block the same size under the depth wheels. Now adjust the depth wheels down until they are lightly pressing on the block. The machine will now be set level with the seeding tine brushing along the top of the ground. When you get in the field you can start to let the depth wheels up (making sure that you turn the same distance on both sides) until the seed is placed at the right depth. NOTE; 1 turn of the top link will adjust the height of the drill by approximately 25mm (1”).

Marker Arms
You should have already set the marker arms up on delivery of the machine. If you do however need to adjust them further you only need to slacken the U-Bolt located about half way down the marker arm and slide the lower section in or out accordingly. Please refer to the preparation section of this manual for further instructions on setting up the marker arms.

Fan Speed
The fan should be set to around 3400rpm. This can be monitored on the RDS electronic box.

IMPORTANT NOTE: - the hydraulic hose to the fan that has a RED end must be attached the pressure side of the hydraulic system on your tractor. The BLUE hose end MUST go to a FREE FLOW return on the tractor. Failure to do this will result in the pressure gauge and hydraulic motor on the fan being damaged. You will need to refer to your Tractor's hand book or ask you dealer where you can find the free flow return as different tractors have them in different locations.

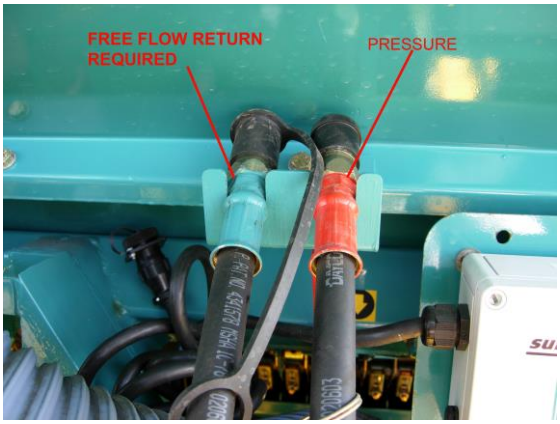

Seed Rate
You can find a quick guide on how to set up your seed rate inside the seed tray located on the rear of the seed distributor unit. This manual will give you a quick setup guide or you can reference to the Sulky Burel manual supplied with the drill for full instructions.

Distribution System Setup for OSR and other Small Seeds

Remove the seed tray from the back of the unit, un-tighten (but do not undo) the black plastic knobs and slide them up then re-tighten them. Now slide the blue coloured part forward to the stop position and slide the seed tray into its place.

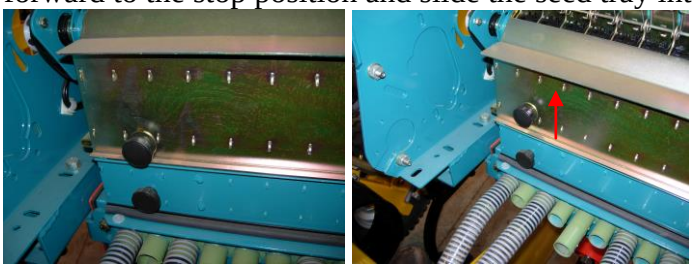

Slide the tabs up.

Slide the blue part forward.

For small seed crops such as OSR you need to insert your green rape shields. Before you put any seed into the system. To do this you must drop the lever on the right hand side in to the lowest position.

Handle dropped off the end of the settings.

You now must slide the green rape shields around the roller to cover over the large teeth leaving only the narrow row of small teeth on the right hand side of the metering wheel visible. The rape shields only need to be used on the metering wheels being employed. You can determine this by knowing that only the rollers above a plastic seed hose are used.

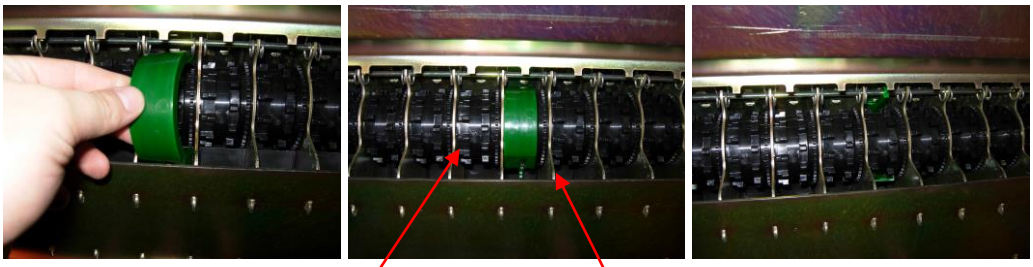

Coarse Teeth Fine Teeth

Now set the gold coloured sliders above the employed meter wheels to position 2, ensure that all the sliders above the unemployed metering wheels are set to 0.

0 1 2 (settings)

The lever on the right hand side needs to be set to position 1 (as shown below).

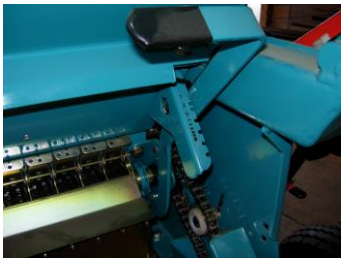

Now turn on the electronic box. Ensure that SE comes up on the display (if DP comes up press either + or – button to get to SE), press OK, the box displays INT, press OK, the box will then set the actuator to 35 (jump out the cab and check it lines up with 35 on the sticker or at least is close to), the box then displays TEST, press OK.

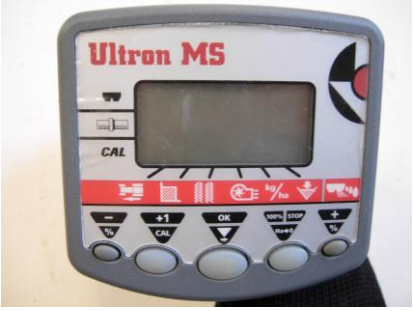

Put your seed into the hopper, then place the handle on the side of the gear box and turn a few times to prime the rollers, now empty the tray back into the seed box. Turn the handle the number of turns required for your machine (in the table below).

Drill Width	No of Handle Turns
3.45m	46.6
4m	41.3
4.8m	34.1
6m	27.5

Now weigh the sample (a very accurate set of digital scales is required for rape seed) and enter the weight into the electronic box. This reading is in Kg, therefore if you wanted to enter 200 grams you would enter 0.200 on the display (be careful that the position of the decimal point is correct!) use the + and – keys to adjust the sample weight accordingly, press enter. Use the + and - keys to move the seed rate to the Kg/Ha you require (tip. If you hold down the button the count moves faster) again bearing in mind the position of the decimal point. Press enter again and the seed rate will automatically adjust to the required rate.

Now double check the output of the box by emptying the seed back into the hopper, replacing the seed tray into position under the rollers, turn the handle relative to the number of turns required for you machine (in the previous table) then weigh the output seed from the box. Multiply this weight by 40 to give the Kg/Ha that the box is metering.

Now remove the seed tray from the drill and pull the blue coloured slider back into position. Slacken the two black knobs and slide them down to secure the channels into place and tighten them up again. Hang the seed distribution tray back on the rear of the metering system and PUT YOUR HANDLE BACK IN THE TOOL BOX.

When you have finished drilling you can slide the channels forward again and slide the seed tray back under the metering system. Drop the handle on the right hand side right down to the bottom (as you did to insert the rape shields), this will let the seed flow freely into the seed tray. You can simply move the handle back up again when the tray is full.

Distribution System Setup for Cereal Size Seeds

Remove the seed tray from the back of the unit, un-tighten (but do not undo) the black plastic knobs and slide them up then re-tighten them. Now slide the blue coloured part forward to the stop position and slide the seed tray into its place.

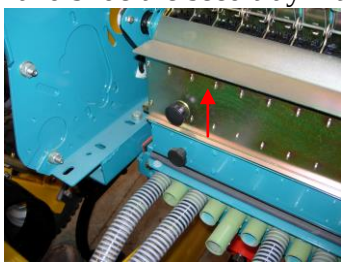

Slide the tabs up.



Slide the blue part forward.

For medium seed crops such as wheat and barley you do not need to insert your green rape shields. They will need to be removed before you put any seed into the system. To do this you must drop the lever on the right hand side in to the lowest position.


Handle dropped off the end of the settings.

You now must slide the green rape shields around the roller until you can see the large face of the shield. The green rape shield can now be pulled away.


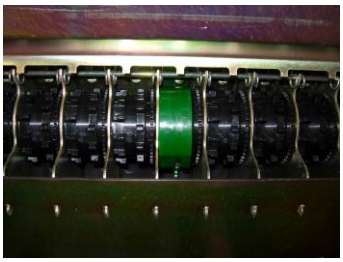


Now set the gold coloured sliders above the employed meter wheels to position 2, ensure that all the sliders above the unemployed metering wheels are set to 0.

0 1 2 (settings)

The lever on the right hand side needs to be set to position 1 (as shown below).

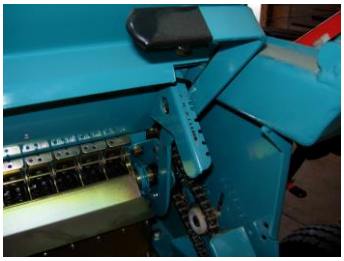

Now turn on the electronic box. Ensure that SE comes up on the display (if DP comes up press either + or – button to get to SE), press OK, the box displays INT, press OK, the box will then set the actuator to 35 (check the actuator lines up with 35 on the sticker or at least is close to it), the box then displays TEST, press OK.

Put your seed into the hopper, then place the handle on the side of the gear box and turn a few times to prime the rollers, now empty the tray back into the seed box. Turn the handle the number of turns required for your machine (in the table below).

Drill Width	No of Handle Turns
3.45m	46.6
4m	41.3
4.8m	34.1
6m	27.5

Now weigh the sample and enter the weight into the electronic box. This reading is in Kg, therefore if you wanted to enter 200 grams you would enter 0.200 on the display or 100Kg is 100, (be careful that the position of the decimal point is correct!) use the + and – keys to adjust the sample weight accordingly, press enter. Now use the + and - keys to move the seed rate to the Kg/Ha you require (tip. If you hold down the button the count moves faster) again bearing in mind the position of the decimal point. Press enter again and the seed rate will automatically adjust to the required rate at the actuator.

Now double check the output of the box by emptying the seed back into the hopper, replacing the seed tray into position under the rollers, turn the handle relative to the number of turns required for you machine (in the previous table) then weigh the output seed from the box. Multiply this weight by 40 to give the Kg/Ha that the box is metering.

Now remove the seed tray from the drill and pull the blue coloured slider back into position. Slacken the two black knobs and slide them down to secure the channels into place and tighten them up again. Hang the seed distribution tray back on the rear of the metering system and PUT YOUR HANDLE BACK IN THE TOOL BOX.

When you have finished drilling you can slide the channels forward again and slide the seed tray back under the metering system. Drop the handle on the right hand side right down to the bottom (as you did to insert the rape shields), this will let the seed flow freely into the seed tray. You can simply move the handle back up again when the tray is full.

Distribution System Setup for Large Size Seeds (Pulses)

Remove the seed tray from the back of the unit, un-tighten (but do not undo) the black plastic knobs and slide them up then re-tighten them. Now slide the blue coloured part forward to the stop position and slide the seed tray into its place.


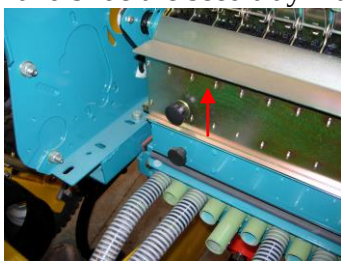

Slide the tabs up.


Slide the blue part forward.

For medium seed crops such as wheat and barley you do not need to insert your green rape shields. They will need to be removed before you put any seed into the system. To do this you must drop the lever on the right hand side in to the lowest position.

Handle dropped off the end of the settings.

You now must slide the green rape shields around the roller until you can see the large face of the shield. The green rape shield can now be pulled away.



Now set the gold coloured sliders above the employed meter wheels to position 2, ensure that all the sliders above the unemployed metering wheels are set to 0.

0 1 2 (settings)

The lever on the right hand side needs to be set to position 5 (as shown below).

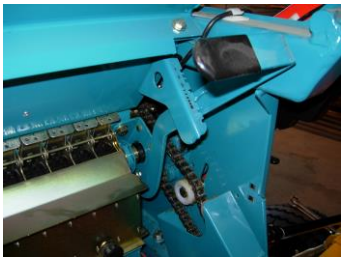

Now turn on the electronic box. Ensure that SE comes up on the display (if DP comes up press either + or – button to get to SE), press OK, the box displays INT, press OK, the box will then set the actuator to 35 (check the actuator lines up with 35 on the sticker or at least is close to it), the box then displays TEST, press OK.

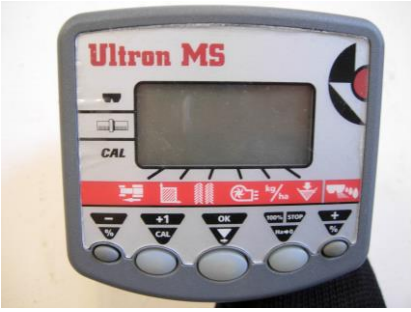

Put your seed into the hopper, then place the handle on the side of the gear box and turn a few times to prime the rollers, now empty the tray back into the seed box. Turn the handle the number of turns required for your machine (in the table below).

Drill Width	No of Handle Turns
3.45m	46.6
4m	41.3
4.8m	34.1
6m	27.5

Now weigh the sample and enter the weight into the electronic box. This reading is in Kg, therefore if you wanted to enter 200 grams you would enter 0.200 on the display or 100Kg is 100, (be careful that the position of the decimal point is correct!) use the + and – keys to adjust the sample weight accordingly, press enter. Now use the + and - keys to move the seed rate to the Kg/Ha you require (tip. If you hold down the button the count moves faster) again bearing in mind the position of the decimal point. Press enter again and the seed rate will automatically adjust to the required rate at the actuator.

Now double check the output of the box by emptying the seed back into the hopper, replacing the seed tray into position under the rollers, turn the handle relative to the number of turns required for you machine (in the previous table) then weigh the output seed from the box. Multiply this weight by 40 to give the Kg/Ha that the box is metering.

Now remove the seed tray from the drill and pull the blue coloured slider back into position. Slacken the two black knobs and slide them down to secure the channels into place and tighten them up again. Hang the seed distribution tray back on the rear of the metering system and PUT YOUR HANDLE BACK IN THE TOOL BOX.

Emptying the Seed Hopper

When you have finished drilling you can slide the channels forward again and slide the seed tray back under the metering system. Drop the handle on the right hand side right down to the bottom (as you did to insert the rape shields), this will let the seed flow freely into the seed tray. You can simply move the handle back up again when the tray is full.

3. Operating depth of points

Please refer to the table below for the tine depth depending on varying crops.

Coulter Equipment To Use				
Crop	**Front Tine**	**Rear Tine**	**Seed Boot**	**Following Equipment**
OSR	19mm, 13mm Carbide or Chromium	75mm Spoon	Short Seed Boot	Press Wheel with Scraper and Harrow
OSR (Alternative)	19mm, 13mm Carbide or Chromium	175mm, 150mm A-Share	Splitter Boot	Press Wheel with Scraper and Harrow
Cereals (Dry & Normal Conditions)	19mm, 13mm Carbide or Chromium	175mm A-Share	Splitter Boot	Press Wheel with Scraper and Harrow
Cereals (Wet Conditions)	19mm, 13mm Carbide or Chromium	150mm A-Share	Splitter Boot	Following Harrow only
Pulses (Winter)	19mm, 13mm Carbide or Chromium	19mm Carbide or Chromium Point	Injector Boot	Following Harrow only
Pulses (Spring)	19mm, 13mm Carbide or Chromium	19mm Carbide or Chromium Point	Injector Boot	Following Harrow only

Coulter Depths and Setup				
Crop	**Front Tine**	**Rear Tine**	**Seed Boot**	**Following Equipment**
OSR	150mm Below seed depth	13-25mm Deep	N/A	Middle compression setting
OSR (Alternative)	150mm Below seed depth	13-25mm Deep	N/A	Middle compression setting
Cereals (Dry & Normal Conditions)	75-100mm Below seed depth	25-40mm Deep	N/A	Middle compression setting
Cereals (Wet Conditions)	75-100mm Below seed depth	25-40mm Deep	N/A	To make the tines work but not block
Pulses (Winter)	45-50mm **ABOVE** seeding depth	150mm Deep	N/A	To make the tines work but not block
Pulses (Spring)	45-50mm **ABOVE** seeding depth	100mm Deep	N/A	To make the tines work but not block

Firstly decide on how much deeper the front tine should be from the rear (refer to table), bearing in mind the base of the rear tine is where the seed will be placed; hence the difference in depth is how much lower the front tine is from the seed. Once this has been established the front tine can be adjusted by slackening the two lower bolts and removing the top pin, adjusting the tine depth and relocating the pin. You can measure the difference in depth between the front and rear tine as shown in the figure. The red line is the depth the front tine will run (as you can see it is deeper than the rear tine).

Set the rear tine depth by adjusting the top links on the depth wheels (shorten the top link to drill seed deeper and lengthen it to drill shallower). Make sure that both the top links are adjusted the same distance to keep the machine level. The depth of the front tine will move consistently with the rear tine and will not need readjusting when the seed depth is adjusted.

The depth of the seed can be monitored by scraping back the loose soil. The soil and trash should also be scraped back between the bands of seed. The seed should be the desired depth below the original surface of the field as shown by the pink line below;

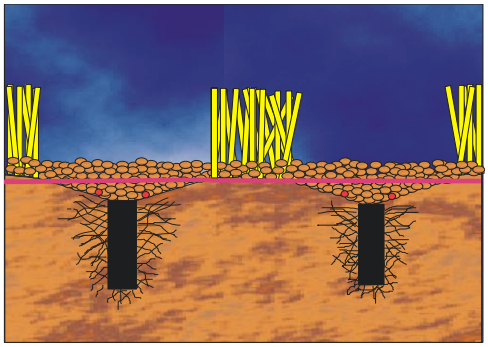

4. How to check the machine is working correctly and adjust it to do so.

The best way to see if the machine is working properly is to look at the effect it is having on the ground behind it.

Firstly check that all the tines are running the same depth. Check the depth by pushing a screwdriver down the slot created by the front tine and measure the depth it went to.

Then measure the depth the points are travelling at either end of the machine. All the points should be travelling at the same depth.

The depth the middle point runs at with respect to the outer (far left and far right) points can be adjusted by lengthening or shortening the top link. By shortening the top link the middle points will run deeper than the outer, by lengthening the top link the middle points will run shallower than the outer.

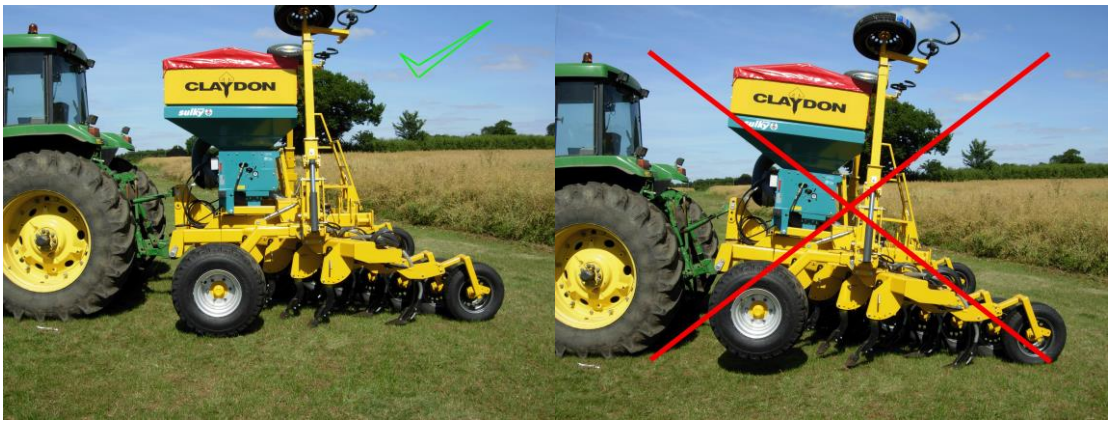

If you find one side of the machine is running deeper than the other you will need to compensate the difference with the depth wheels.

If the machine is running too deep all the soil profile will be moved as shown below:

If the seed depth is set correctly, you will need to lift the front tines up a hole. This is done by slackening the two bolts either side of the front tine and removing the pin in the top. Now lift the tine up and replace the pin, then tighten up the shear bolt and the front bolt.

If the seed is being placed too deep; you will need to lengthen the top-links that adjust the depth wheels to raise the whole machine out of the ground.

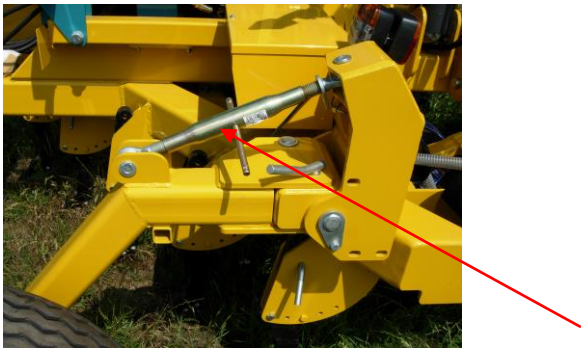

Adjust on Top Link

If you can see seed on top of the ground you will need to determine the cause. This could be that the seed is not being drilled deep enough, or the tyre is plucking it out again or the soil is not crumbling back down and you can see the seeds between the clods.

- If the machine is not drilling deep enough; shorten the top links on the depth wheels.
- If the tyres are plucking the seed out; remove the press wheel assemblies and replace with the harrow assembly.
- If the soil is not crumbling down; carry on drilling either with the harrow tines or with nothing following the seeding tine at all, leave the field until it has had 24 hours drying time and run a Cambridge roll or a press over it.

5. General Maintenance

The Claydon Drill needs very little maintenance. The grease nipples are located as follows:

3.45m / 4m

The 3.45 and 4m machines only have one grease point, it is found on the stub axle that has been machined to accommodate a shaft to drive the seed distribution unit as pictured below.

This Grease Nipple should be greased every 50h of operation

4.8m / 6m

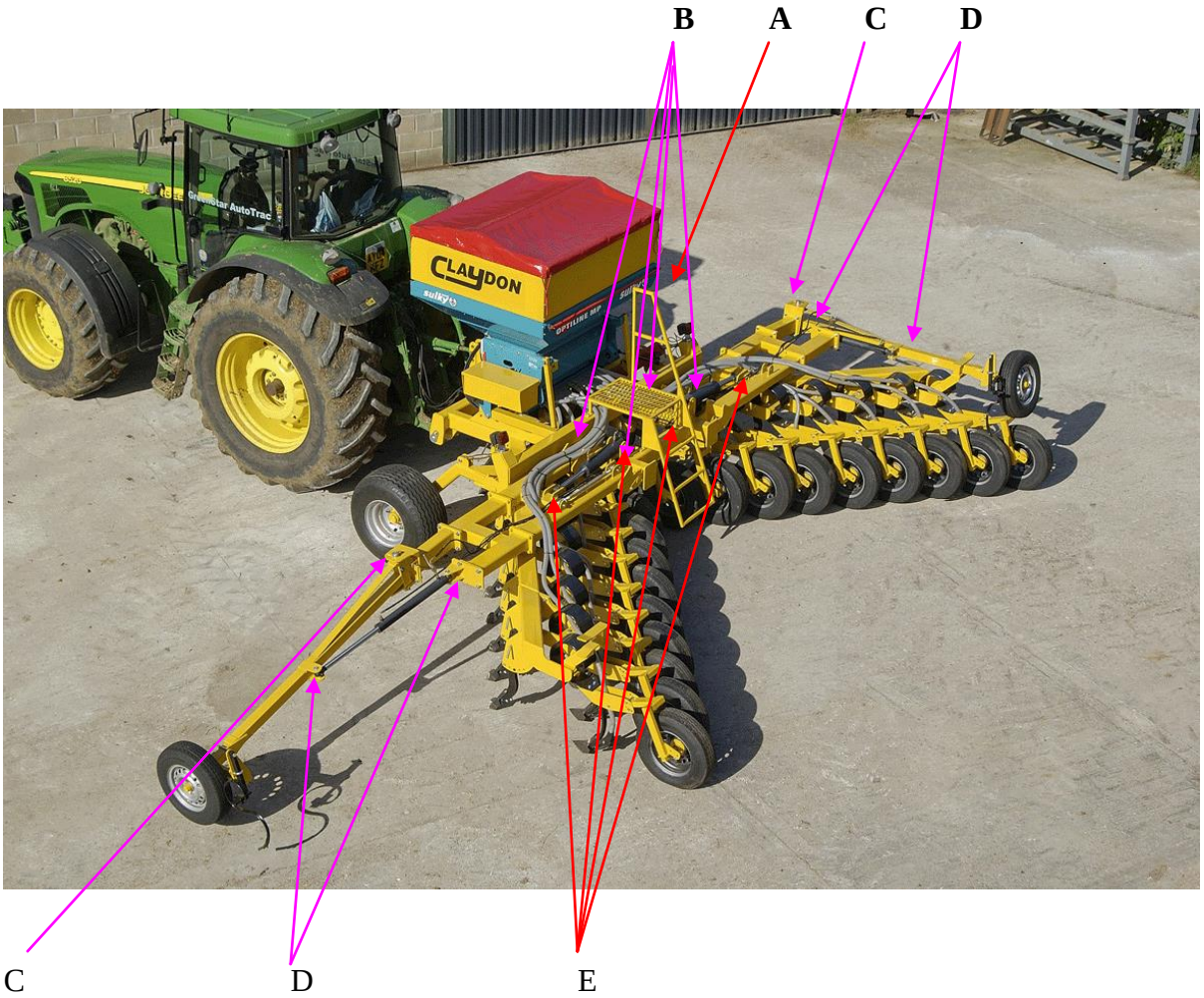

A – Drive on Depth Wheel
10 Hours

B – Wing Pivots
50 Hours

C – Marker Pivot
10 Hours

D – Marker Ram Ends
10 Hours

E – Folding Ram Ends
50 Hours

The air box on the Sulky Burel seeding unit should be checked for blockages weekly in normal conditions. In very dry, dusty conditions with a lot of straw blowing about it should be checked daily. See below for picture of blocked air box;

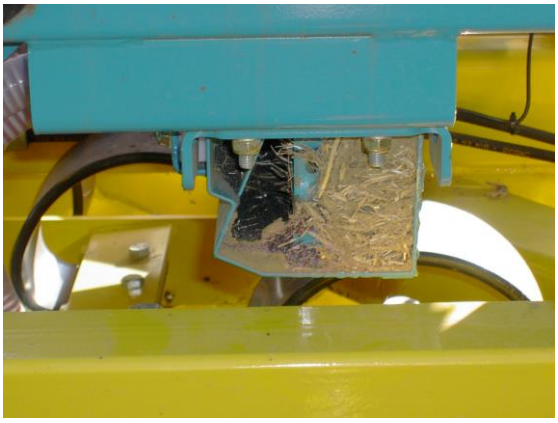

Wearing parts (points) should be changed when worn out or broken off.

Trouble Shooting

Problem	Possible Causes	Solutions
The machine is blocking up while drilling rape	The Straw Chop is not good	- Remove every other row of tines. - Disc or culti-press the field in front of the drill - Just press in front of the drill
	The Soil is Puffy	Press the field in front of the drill
	There is a lot of trash on top	Disc or culti-press in front of the drill
	There is bind weed, knot grass or similar on top	Disc in front of the drill
The machine is blocking up while drilling Cereals	The Straw Chop is not good	Disc and / or culti-press the field in front of the drill.
	The Soil is Puffy	Press the field in front of the drill
	There is a lot of trash on top	Disc or culti-press in front of the drill
	There is bind weed, knot grass or similar on top	Disc in front of the drill
The seed is not coming out of the pipes	The air box is blocked	Remove the end plate of the air box and blow out as listed in the maintenance section
	The seed pipe is blocked	Check for blockages and remove any.

The pressure gauge on the Sulky Burel seed hopper has gone to the end and is not returning	The oil return pipe from the hydraulic motor driving the fan is not in a free flow return to the tractor	Put the return pipe from the fan into a free flow return on the tractor and replace the pressure gauge
The Marker arms won't work	The hydraulic pipes are not connected to the tractor property	Connect the pipes to the tractor
	The transport pins on a 3.45 or 4m machine have not been removed	Remove the transport pins
	The Lock off valve on 4.8m and 6m machines marker rams have not been opened	Open the valves on the marker rams
	The sequencing valve is shut down	Adjust the sequencing valve as described in the maintenance section
The marker arms are not sequencing properly	The sequencing valve needs adjustment	Adjust the sequencing valve as described in the maintenance section
The markers are not counting on the electronic box	The magnets are not aligning with the reed switch	Align magnets with the reed switch
	The reed switch is broken	Change the reed switch
	The markers are moving too fast for the reed switches to keep up.	Either reduce the flow rate of the oil to the marker rams from the tractor cab or adjust the sequencing valve as described in the maintenance section

The wings will not fold up/down	The hydraulic pipes are not connected to the tractor properly	Connect the hydraulic pipes
	The transport cross member is still in place	Undo the transport cross member
	The lock down pins are in place	Remove the lock down pins

Parts Manual

Row setup


Spring tine-Goliath
Pt. No. 101.10404-1
M16 x 55 Hex Head
Bolt & Nyloc
M12 Stirrup Bolt
Pt. No. 101-10404-3
2 x M12 Nyloc Nuts
Front tine &
accessories
Lower Part 50 x 20
Pt. No. 101.10404-2
See Seed Distributors
Shares and points
See Seed Distributors

Front tine and accessories

Seed Distribution Shares and Points

Speed-Loc adapter Rear
200-QCA-5010

½”UNF x 2½”
Plough Bolt & Nut
(2)

7” Sweep 8mm
200-PWW-0708

5.5” Sweep 8mm
200-PWW-0508

3” Spoon
200-SPN-0308

Std. Knife
200-KNF-0810

Seed Distributors

Seed Boot Holder
300-HLD-5010

Bean Shoot
300-ATM-1035

Attachment Nut & Bolt
300-BNC-4404

Splitter
300-ATM-1010

Straight Attachment
300-ATM-1000

Broadcast attachment
300-ATM-1000

Single row drill options

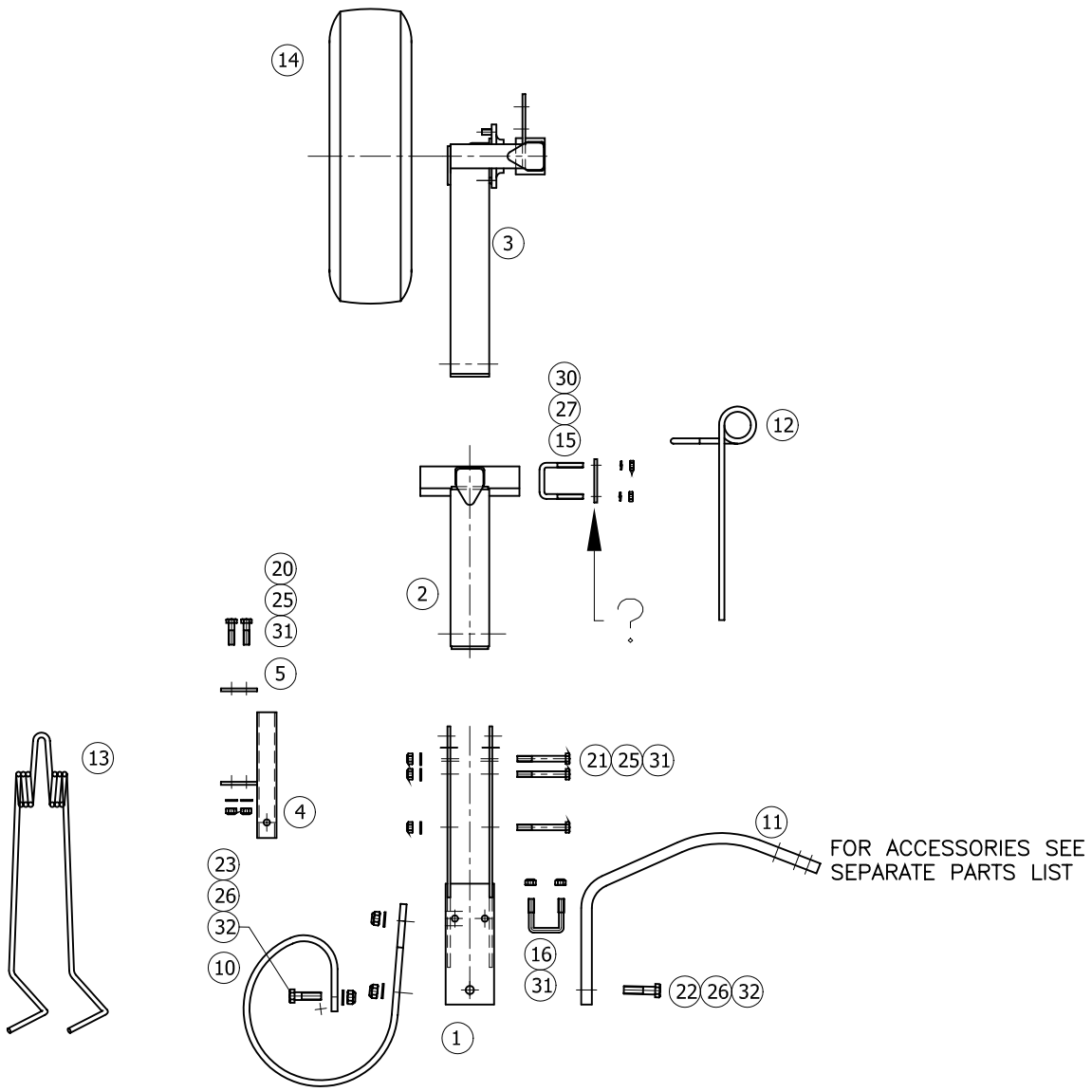

V1.1

Item	No Off	Part No.	Description
1	1	CYA60100-1	Mounting bracket assy
2	1 **	CYA60110-2	Tine carrier assy
3	1 ***	CYA60117-4	Arm firming wheel assy
4	1 *	CYA60590-1	Harrow fixing bracket
5	1	CY60592-1	Mounting plate-harrow fixing
6			
7			
8			
9			
10	1		Spring tine
11	1		tine
12	2 **		Tine
13	1 *		Twin tine
14	1 ***	CYA60119-0	Tyre & wheel assy F/W
15	1		U Boly M10 65 Ctr x 80
16	1		U Bolt M12 62 ctrs x 60

Item	No Off	Part No.	Description
17			
18			
19			
20	2		M12 x 45 Hex hd screw
21	3		M12 x 110 Hx hd screw
22	1		M16 x 65 Hx hd bolt grade 10.9
23	2		M16 x 55 Hx hd bolt grade 10.9
24			
25	5		M12 Plain washer
26	3		M16 plain washer
27	2		M10 SC Spring washer
28			
29			
30	2		M10 full nut
31	7		M12 Nyloc nut
32	3		M16 Nyloc nut

3 metre main frame assy 2005

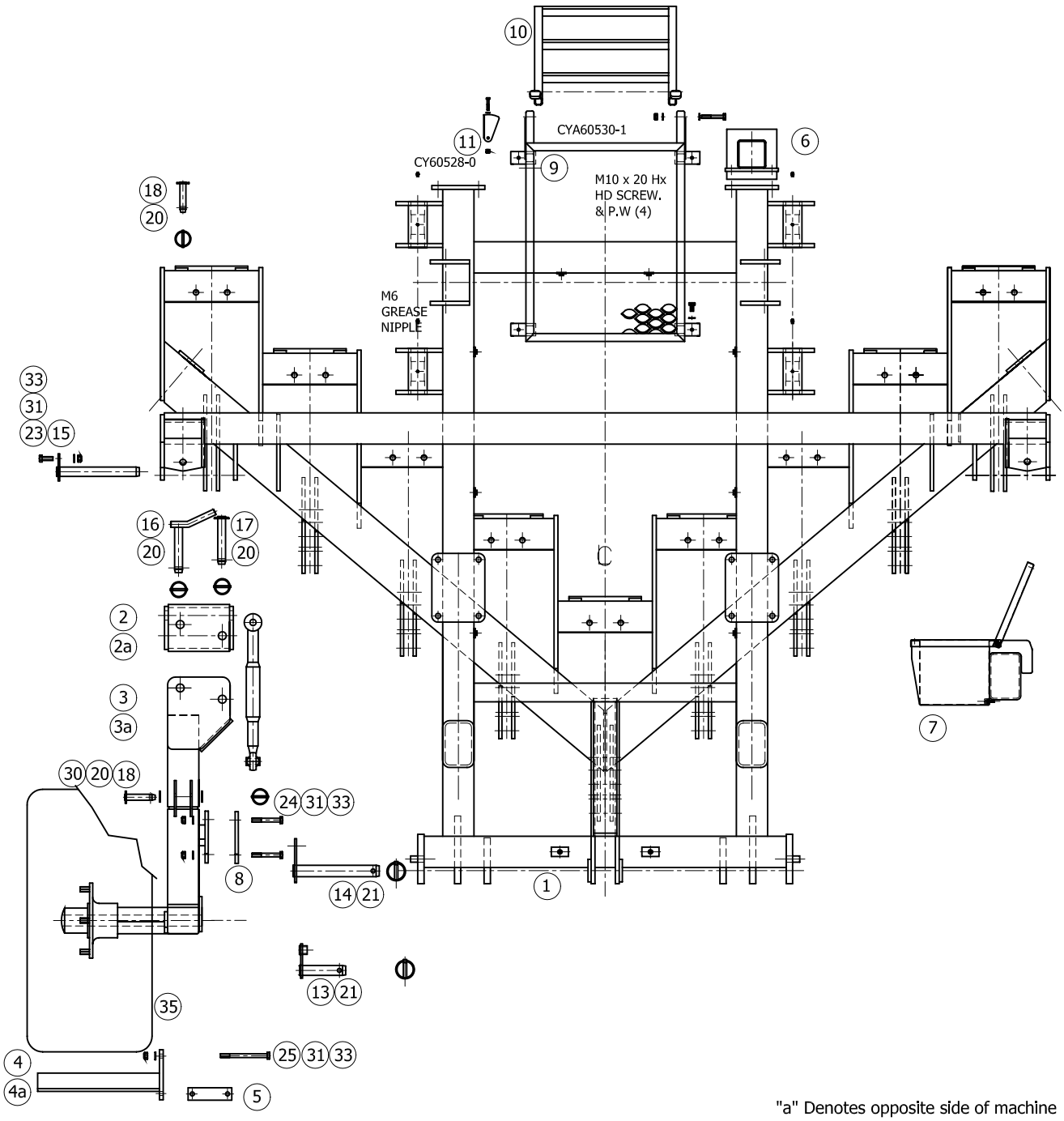

"a" Denotes opposite side of machine

Item	No Off	Part No.	Description
1	1	CYA60400-3	Frame w/assy 3m Hydraulic
2	1	CYA60430-2	Pivot block RH depth wheel
2a	1	CYA60432-2	Pivot block LH depth wheel
3	1	CYA60420-2	Depth wheel w/assy RH
3a	1	CY60421-2	Depth wheel w/assy LH
4	1 Opt.	CYA60580-0	Tyre scrapper RH
4a	1 Opt.	CYA60581-0	Tyre scrapper LH
5	4 Opt.	CY60584-0	Strap wheel scrapper
6	1	CYA60478-0	Rear stabliser
7	1	CYA60330-2	Tool box
8	1	CYA60064-1	Clamp plate-meter wheel
9			
10			
11			
12			
13	1	CYA60522-0	Top link pin Cat III
14	2	CYA60062-0	Bottom link pin Cat III
15	2	CYA60542-0	Pivot pin depth wheel
16	2	CYA60540-0	Depth wheel locking pin
17	2	CYA60528-0	Pivot pin depth wheel
18	4	CYA60526-0	Pin-depth wheel top link

Item	No Off	Part No.	Description
19			
20	8		Linch pin 6 Dia. x 45 long
21	3		Linch pin 11 Dia. x 45 long
22			
23	2		M12 x 35 Hx hd screw 8.8
24	2		M12 x 100 long Hx hd screw 8.8
25	8 Optional		M12 x 160 long Hx hd bolt 8.8
26			
27			
28			
29			
30	4		3/4" Plain washer
31	4		M12 Plain washer
32			
33	12		M12 Nyloc nut
34	2	VLK 1007	TOP LINK 17 1/2" CTR
35	2	??	Tyre & wheel assy
36			
37			
38			

Sulky grain tank extension & mounting 2005

CYA60139-1

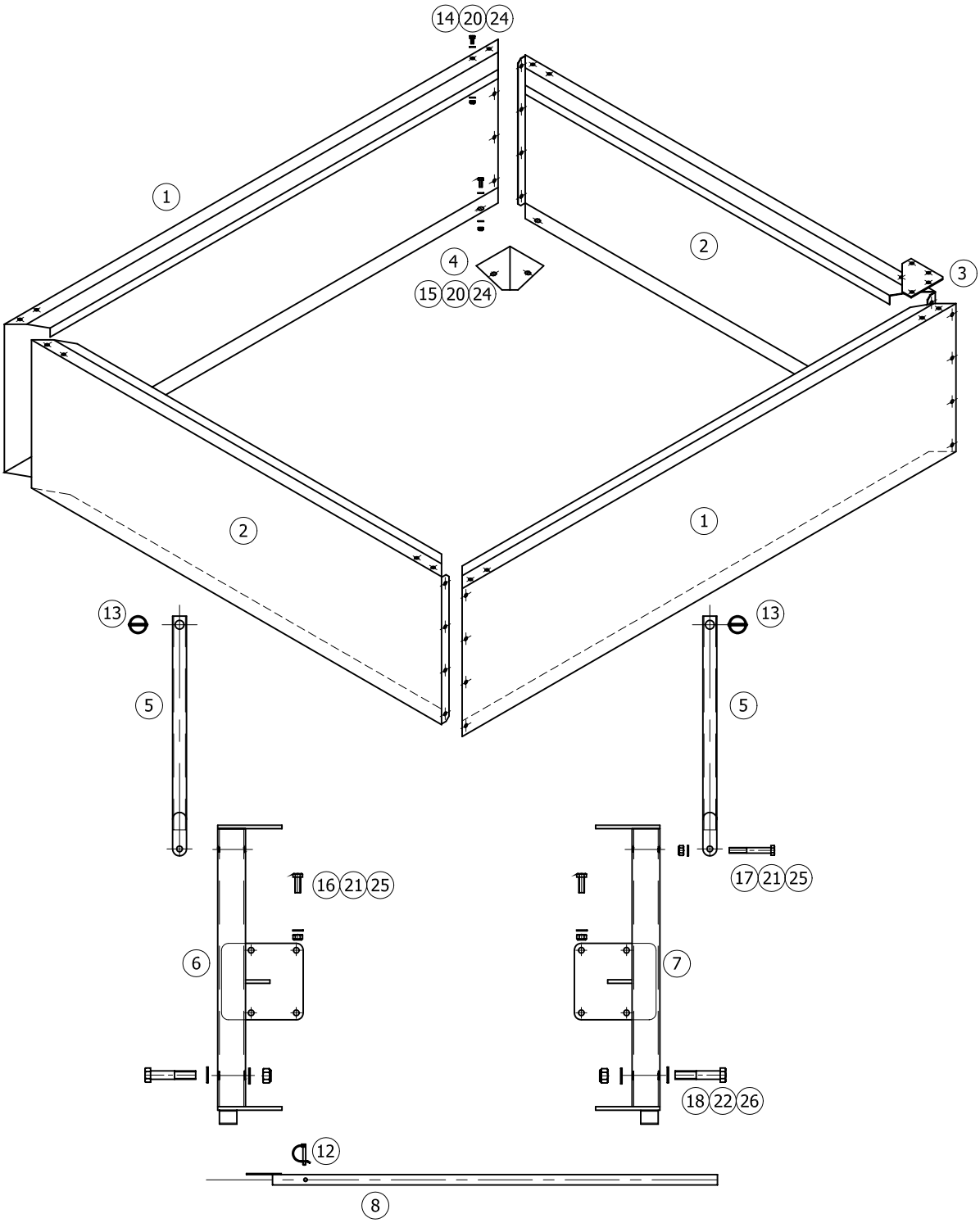

Item	No Off	Part No.	Description
1	2	CYA60152-0	Tank extension front & back
2	2	CYA60153-2	Tank extension side
3	4	CYA60154-0	Tank extension top bracket
4	4	CYA60155-0	Tank extension bottom bracket
5	2	CYA60143-2	Support leg w/a grain tank
6	1	CYA60147-3	Support beam RH
7	1	CYA60146-1	Support beam LH
8	1	CYA60570-0	Wheel scraper
9			
10			
11			
12	1	VLF 3233	8 x 50 Linch pin
13	2		Linch pin 6 Dia. x 45 long

Item	No Off	Part No.	Description
14	28		M8 x 16 Hex hd srew
15	8		M8 x 20 Hx hd screw
16	8		M16 x 45 Hex hd screw
17	2		M16 x 110 Hex hd bolt
18	2		M24 x 130 Hx hd bolt
19			
20	64		M8 Plain washer
21	10		M16 plin washer
22	4		M24 plain washer
23			
24	36		M8 Nyloc
25	10		M16 Nyloc
26	4		M24 Nyloc

4.8 & 6 metre wing & tine extension 2005

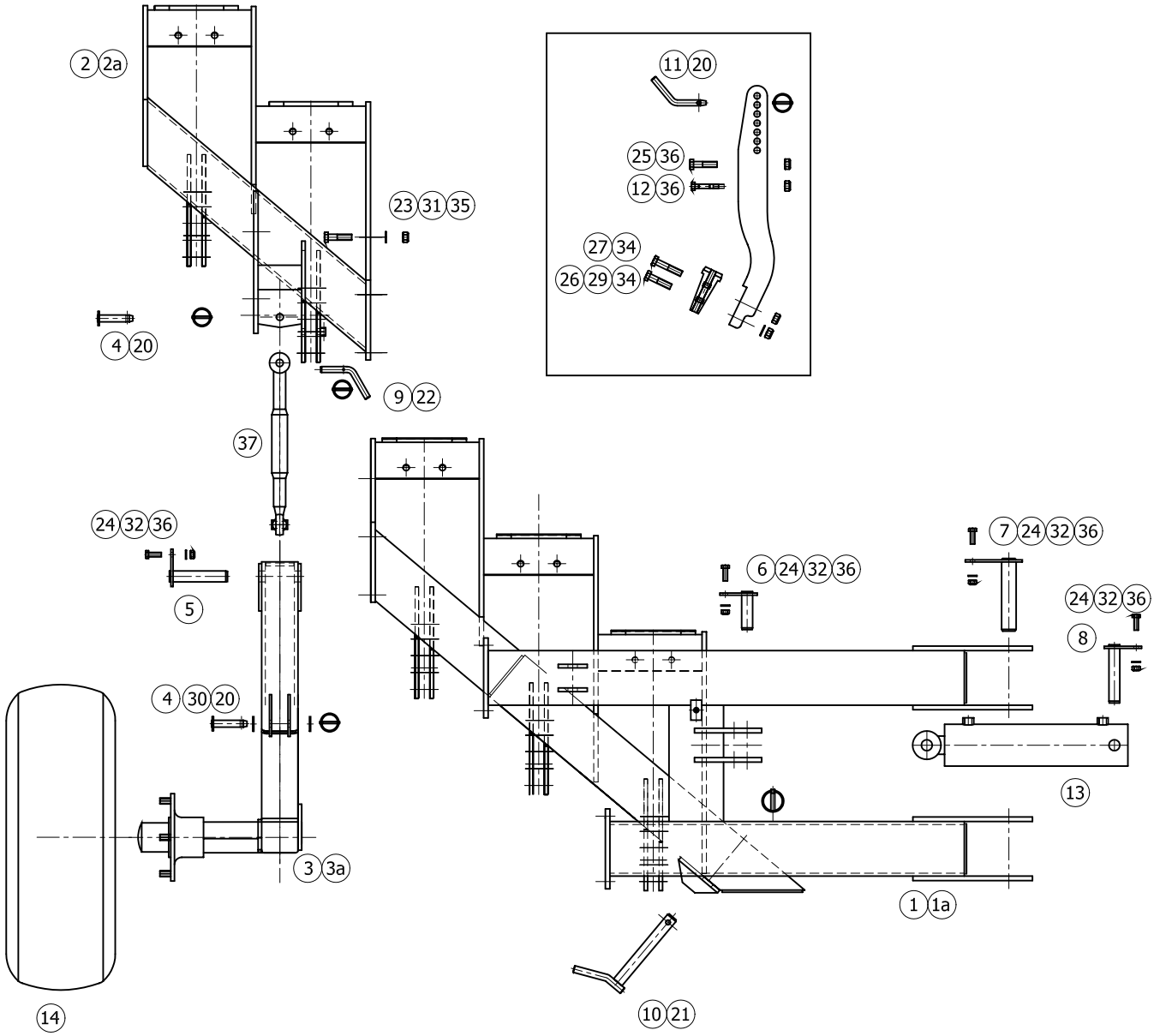

"a" Denotes opposite side of machine

Item	No Off	Part No.	Description
1	1	CYA60435-4	Wing assembley R.H 3 tine
1a	1	CYA60436-3	Wing assemley LH 3 tine
2	1	CYA60495-1	Double tine ext' RH 6M
2a	1	CYA60496-1	Double tine ext' LH 6M
3	1	CYA60510-?	Axle assy D/Wheel RH outter
3a	1	CYA60511-?	Axle assy D/Wheel LH Outter
4	4	CYA60526-0	Pivot pin top link D/Wheel
5	2	CYA60542-1	Pivot pin depth wheel
6	4	CYA60042-0	Ram pin assy - push rod
7	4	CYA60520-0	Pivot pin wing
8	2	CYA60041-0	Ram pin Assy - body
9	2	CY60548-1	Pin-Short front tine
10	2	CYA60540-0	Depth wheel locking pin
11	8	CY60545-0	Front tine pin
12	10	CY60067-0	Shear bolt
13	2	CYA69002-0	Hydraulic cylinder - wing
14	2	CYA	Tyre and wheel assy
15			
16			
17			
18			

Item	No Off	Part No.	Description
19			
20	14		Linch pin 6 Dia. x 45 long
21	2		Linch pin 11 Dia. x 45 long
22	2		Linch pin 6 Dia. x 45 long Spcl.
23	10		M16 x 45 Hx hd screw 8.8
24	10		M12 x 35 long Hx hd screw 8.8
25	10		M12 x 65 long Hx hd bolt 8.8
26	10		1/2"-20 UNF x 2 1/2" long Hx hd bolt
27	10		1/2"-20UNF x 3" long Hx hd boly
28			
29	10		1/2" Plain washer
30	4		3/4" Plain washer
31	10		M16 Plain washer
32	10		M12 Plain washer
33			
34	20		1/2"-20 UNF Nyloc nut
35	10		M16 Nyloc nut
36	30		M12 Nyloc nut
37	2	VLK 1007	TOP LINK 17 1/2" CTR
38			
39			

3.5 Metre marker arm assembly 2005

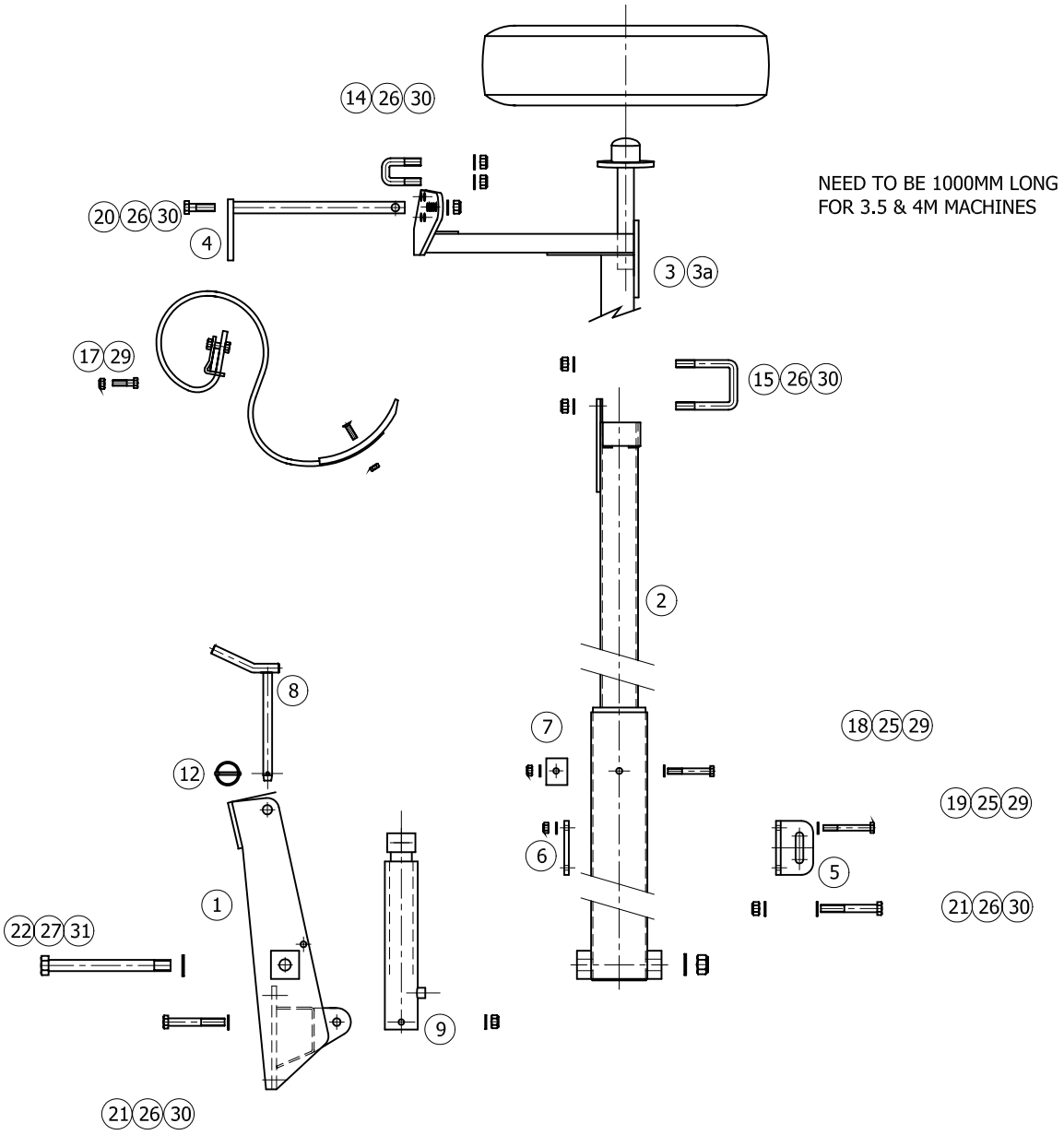

Item	No Off	Part No.	Description
1	2	CYA60232-5	Bracket arm mounting 3.5m
2	2	CYA60231-2	Inner arm W/A 3.5m
3	1	CYA60486-1	Marker tine support RH
3a	1	CYA60485-1	Marker tine support LH
4	2	CYA60490-0	Bracket marker tine
5	2	CYA60233-1	Ram anchor - arm
6	2	CY60244-0	Clamp plate-ram anchor 3.5m
7	2	CY60246-0	Stop-ram anchor 3.5m
8	2	CYA60546-0	Transport pin
9	2	CYA69004-0	Hydraulic cylinder 3.0M M/A
10	2	CYA	Marker tine
11	2	CYA60119-0	Tyre & wheel assy
12	2		Linch pin 6 Dia. x 45 long
14	2		U Bolt M16 x 42 x 67
15	2		U Bolt M16 x 115
16			

Item	No Off	Part No.	Description
17	2		M12 x 45 Hex hd screw
18	2		M12 x 90 Hex hd bolt
19	8		M12 x100 Hx hd bolt
20	2		M16 x 55 Hx hd bolt
21	4		M16 x 110 Hx hd screw
22	2		M24 x 260 Hx hd bolt
23			
24			
25	12		M12 Plain washer
26	14		M16 plain washer
27	4		M24 plain washer
28			
29	12		M12 Nyloc
30	12		M16 Nyloc
31	2		M24 Nyloc
32			

4.8 metre marker arm Assembly 2005

Right hand side of machine

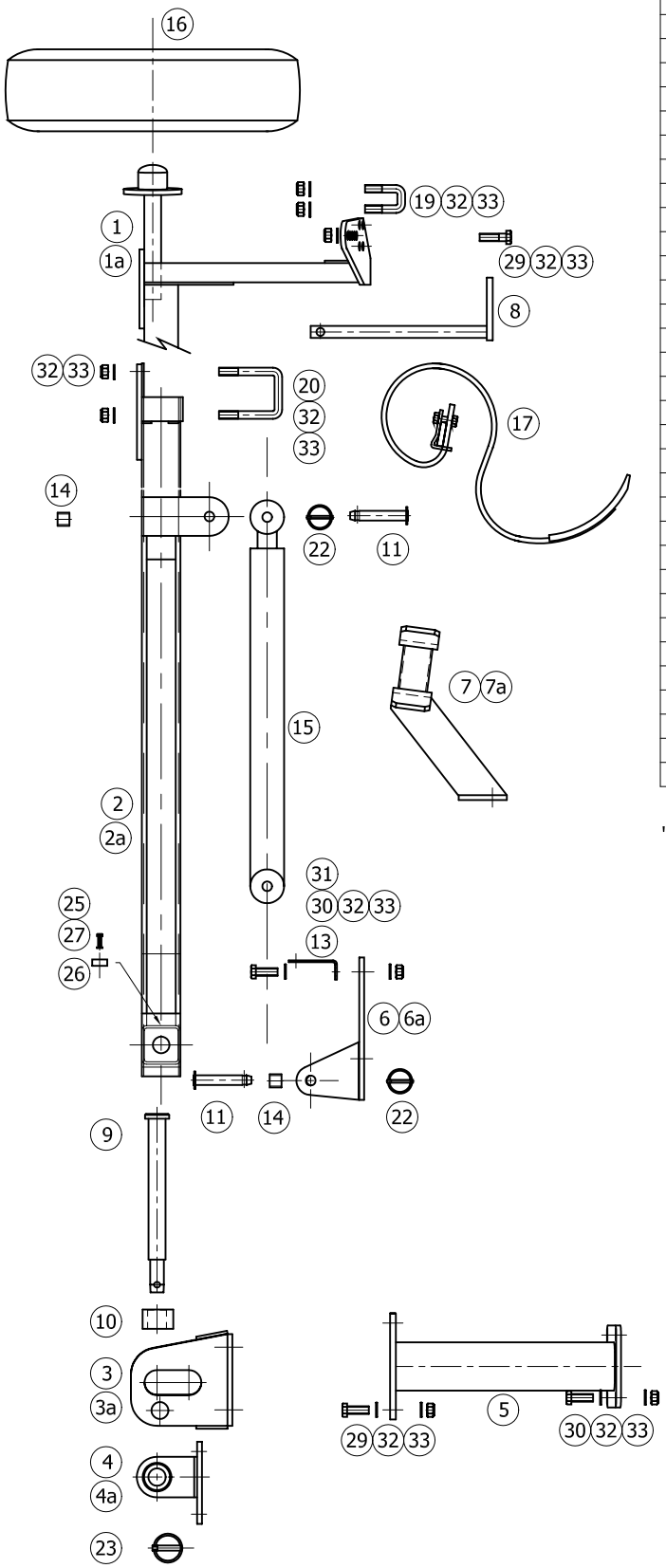

Item	No Off	Part No.	Description
1	1	CYA60486-2	Marker tine support R.H
1a	1	CYA60485-2	Marker tine support L.H
2	1	CYA60217-2	Marker arm R.H
2a	1	CYA60218-2	Marker arm L.H
3	1	CYA60194-2	Mounting assembly M/A top R.H
3a	1	CYA60195-2	Mounting assembly M/A top L.H
4	1	CYA60644-0	Mounting assembly M/A bottom R.H
4a	1	CYA60645-0	Mounting assembly M/A bottom L.H
5	2	CYA60204-1	Marker mounting extension
6	1	CYA60215-0	Cylinder mount - M/A R.H
6a	1	CYA60214-0	Cylinder mount - M/A L.H
7	1	CYA60223-2	Marker transport bracket R.H
7a	1	CYA60222-2	Marker transport bracket L.H
8	2	CYA60490-1	Bracket - Marker tine
9	2	CYA60075-0	Shaft W/A marker arm
10	2	CY60078-1	Roller marker arm shaft
11	4	CYA60521-0	Cylinder pin marker arm
12			
13	2	CY60573-1	Bracket reed switch marker arm
14	8	CY600072-1	Spacer M/Arm cylinder
15	2	CYA69003-0	Hydraulic Cylinder marker arm 4.8/6
16	2	CYA60119-0	Tyre and wheel assy
17	2		Marker tine
18			
19	2		U Bolt M16 X 42 X 67
20	2		U Bolt M16 x 115
21			
22	4		Linch pin 6 Dia. x 45 long
23	2		Linch pin 11 Dia. x 45 long
24			
25	2		Magnet - Sensor
26	2		M6 x 20 Hex Hd screw
27	2		M6 plain washer
28			
29	10		M16 x 55 Hex hd screw 10.9
30	24		M16 x 45 Hx hd screw 8.8
31	2		M16 x 50 Hx hd screw 8.8
32	58		M16 plain washers
33	34		M16 Nyloc nuts

"a" Denotes opposite side of machine

6 metre marker arm Assembly 2006

Right hand side of machine

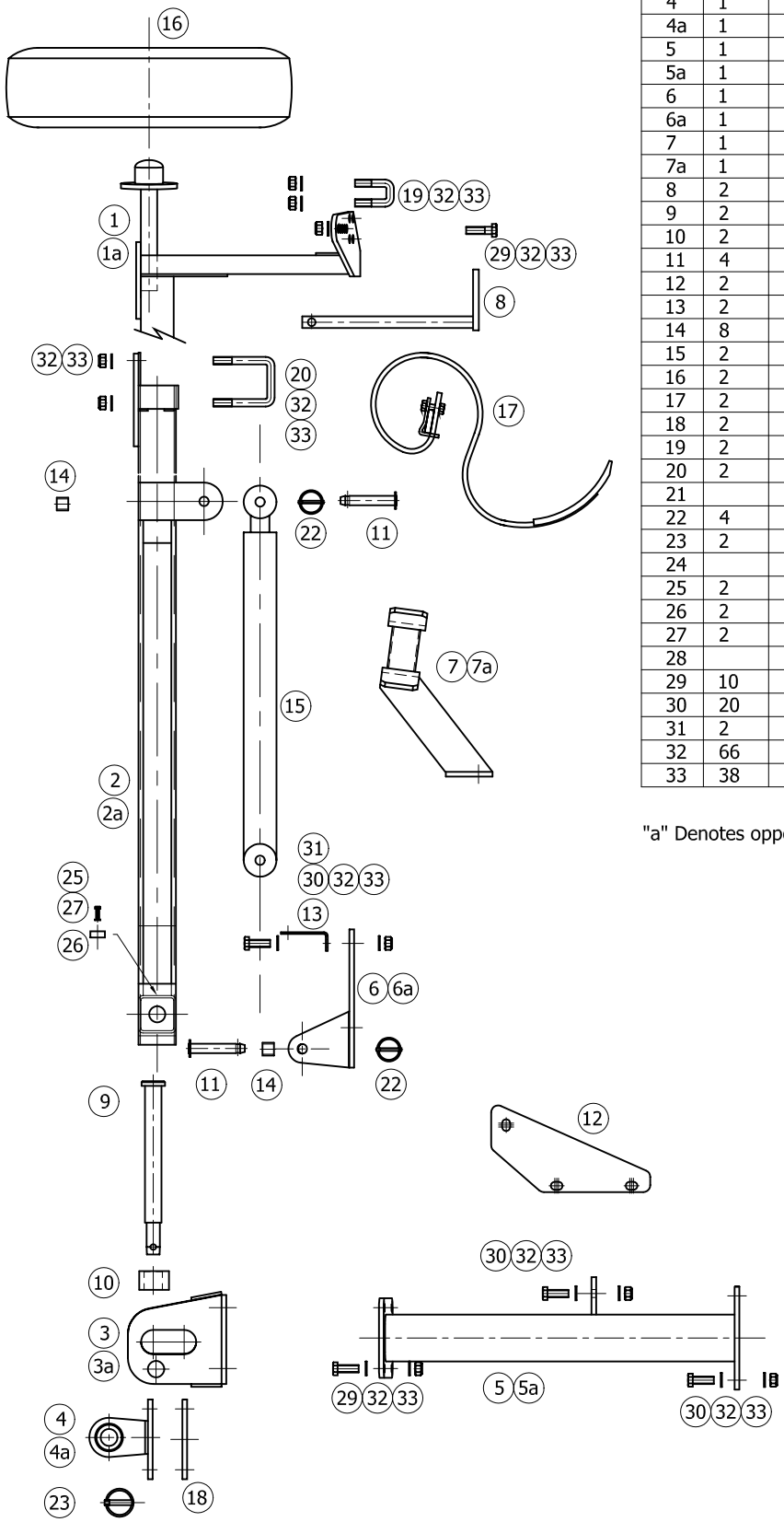

Item	No Off	Part No.	Description
1	1	CYA60486-2	Marker tine support R.H
1a	1	CYA60485-2	Marker tine support L.H
2	1	CYA60217-2	Marker arm R.H
2a	1	CYA60218-2	Marker arm L.H
3	1	CYA60194-2	Mounting assembly M/A top R.H
3a	1	CYA60195-2	Mounting assembly M/A top L.H
4	1	CYA60642-0	Mounting assembly M/A bottom R.H
4a	1	CYA60643-0	Mounting assembly M/A bottom L.H
5	1	CYA60505-2	Extension M/A support R.H
5a	1	CYA60509-0	Extension M/A support L.H
6	1	CYA60215-0	Cylinder mount - M/A R.H
6a	1	CYA60214-0	Cylinder mount - M/A L.H
7	1	CYA60223-3	Marker transport bracket R.H
7a	1	CYA60222-3	Marker transport bracket L.H
8	2	CYA60490-1	Bracket - Marker tine
9	2	CYA60075-0	Shaft W/A marker arm
10	2	CY60078-1	Roller marker arm shaft
11	4	CYA60521-0	Cylinder pin marker arm
12	2	CY60494-1	Tie plate M/A extension
13	2	CY60573-2	Bracket reed switch marker arm
14	8	CY600072-1	Spacer M/Arm cylinder
15	2	CYA69003-0	Hydraulic Cylinder marker arm 4.8/6
16	2	CYA60119-0	Tyre and wheel assy
17	2		Marker tine
18	2	CY600020-0	End plate attachment 12.5mm
19	2		U Bolt M16 X 42 X 67
20	2		U Bolt M16 x 115
21			
22	4		Linch pin 6 Dia. x 45 long
23	2		Linch pin 11 Dia. x 45 long
24			
25	2		Magnet - Sensor
26	2		M6 x 20 Hex Hd screw
27	2		M6 plain washer
28			
29	10		M16 x 55 Hex hd screw 10.9
30	20		M16 x 45 Hx hd screw 8.8
31	2		M16 x 50 Hx hd screw 8.8
32	66		M16 plain washers
33	38		M16 Nyloc nuts

"a" Denotes opposite side of machine

3.5 AND 4 Metre extensions 2006

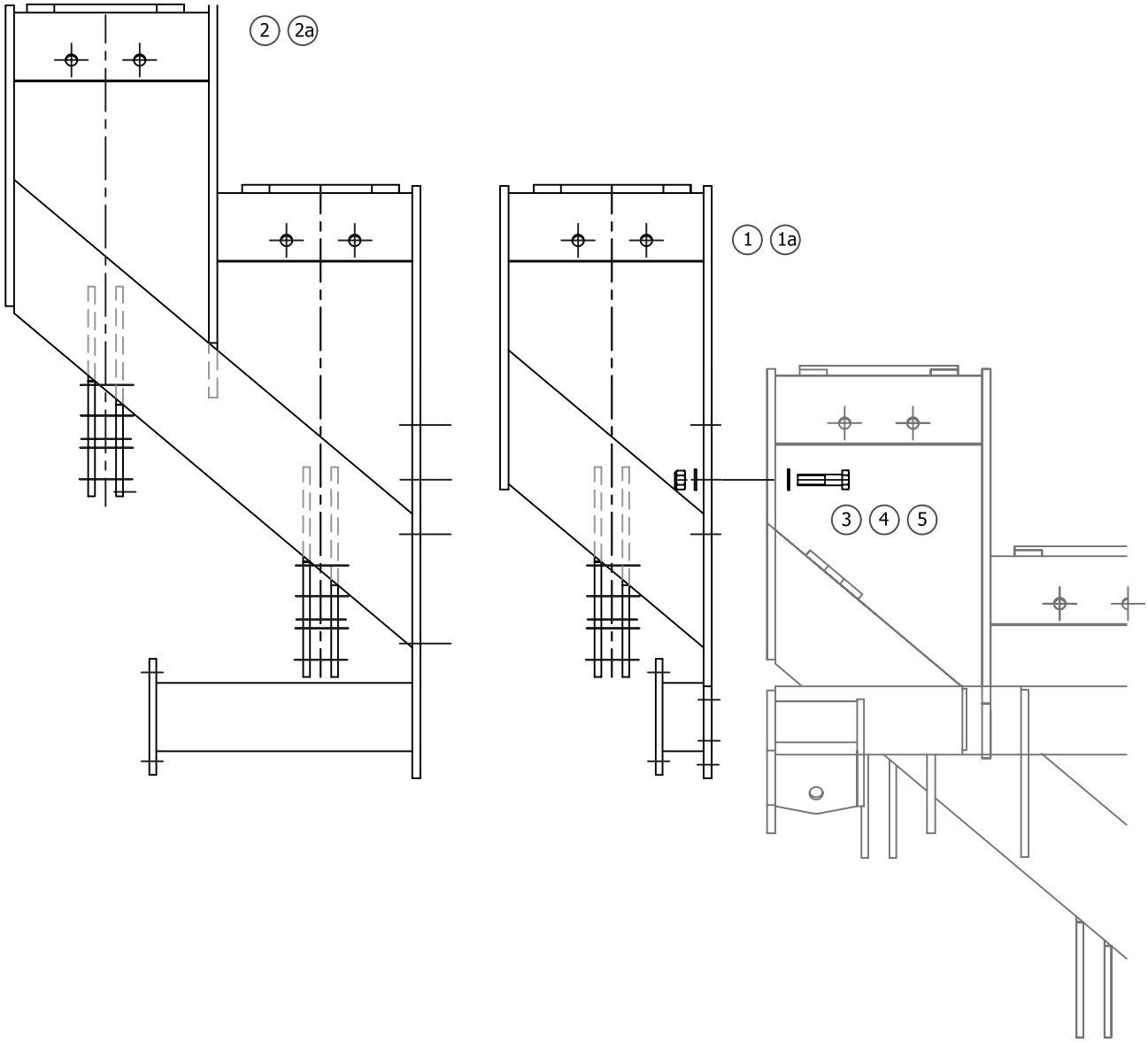

"a" Denotes opposite side of machine

Item	No Off	Part No.	Description
1	1	CYA60460-1	Tine extension single LH
1a	1	CYA60461-1	Tine extension single RH
2	1	CYA60465-3	Tine extension twin LH
2a	1	CYA60466-3	Tine extension twin RH
3	6		M16 X 50 hX hd bolt grade 10.9
4	12		M16 plain washer
5	6		M16 nyloc not
6			

Metering drive Sulky seed box.

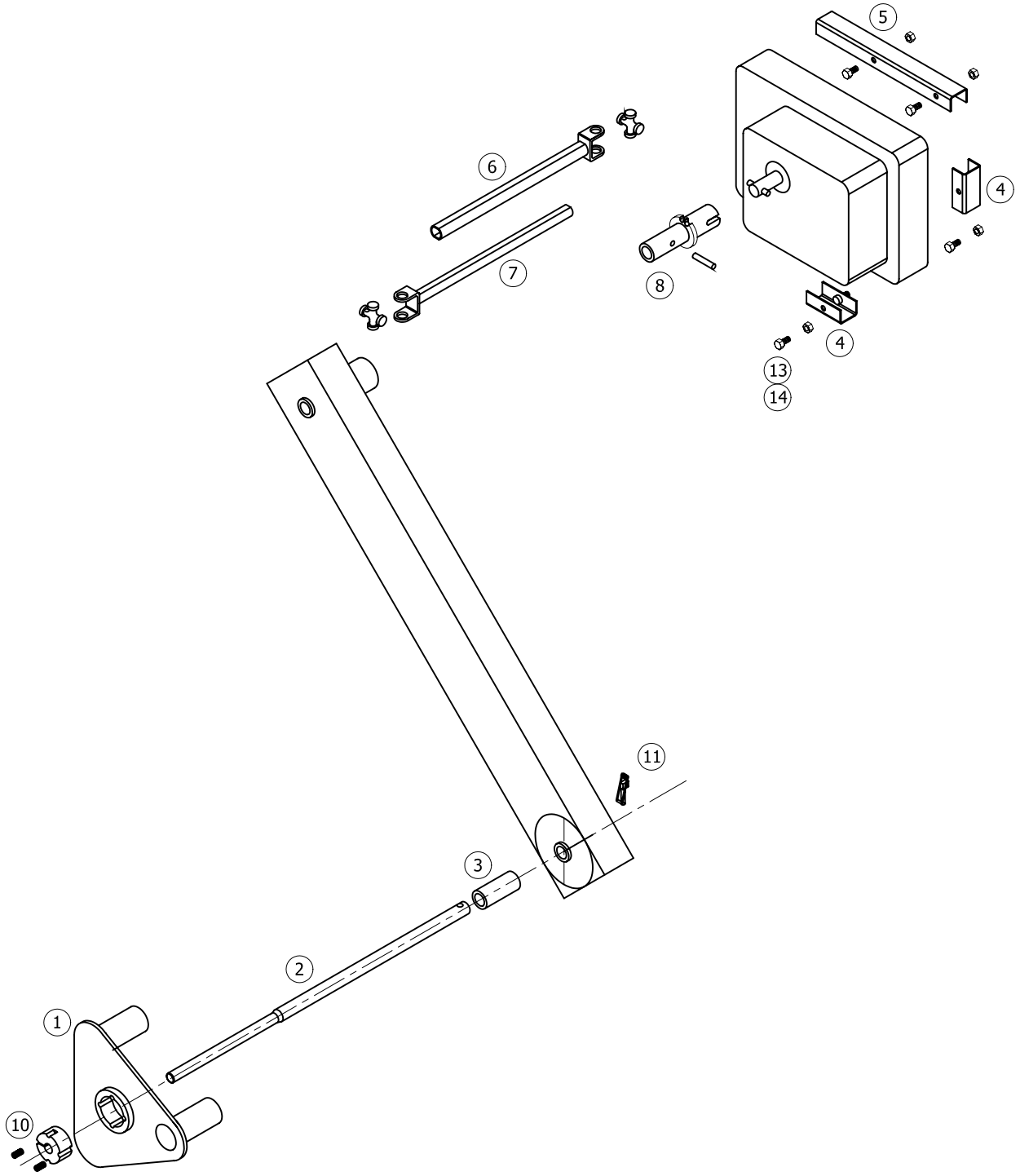

Item	No Off	Part No.	Description
1	1	CYA60136-1	Axle drive plate w/a
2	1	CYA60443-0	Drive shaft meter wheel
3	1	CYA60444-0	Spacer-Meter drive shaft
4	2	CYA60567-0	Gearbox spacer short
5	1	CY60565-0	Gearbox spacer long
6	1	CY60134-0	Drive shaft seed box
7	1	CY60135-0	Drive shaft - drive wheel
8	1	CYA60560-0	Sprocket extension speed change
9			
10	1		Taper-loc bush 16mm bore
11	1		Linch pin Sulky special
12			
13	4		M8 X 16 Hx hd screw
14	4		M8 full nut
15			
16			